USB Type-C Cable eMarker CH252

V1E

http://wch-ic.com

1. Overview

CH252 is a USB Type-C cable eMarker that supports USB Type-C 2.1 standard and USB PD 3.1 standard, and can be used for various Type-C cable related applications.

The CH252 ships with a default configuration programmed in internally. The CH252L chip, CH252A chip, and the terminals and finished cables using CH252A all support update programming configuration data through a special programming tool. In addition to the default configuration, each CH252 also supports up to 5 times of configuration data update programming, and has a data lock function.CH252's factory default configuration data has a variety of options.

The CH252 is USB-IF PD3.1 certified with TID number 9134.

2. Features

- VCONN supports input voltages from 2.7V to 22V
- Support USB Type-C 2.1 standard and USB PD 3.1 standard
- Integrated VCONN diode and Ra resistor
- VCONN pin tolerant 25V and CC pin tolerant 28V
- Support configuration data update program-in
- Support EPR Mode
- Support Discover SVIDs, Discover Modes, Enter Mode, Exit Mode messages
- Support Get_Manufacturer_Info message, manufacturer string configurable
- Support Get_Status messages
- TID: 9134

3. Applications

- USB Type-C Passive Cable
- USB4™ Passive Cable

4. Pinouts and Pin Description

4.1 CH252 Package Pinouts

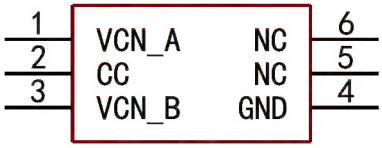

CH252L(DFN6-2*2)

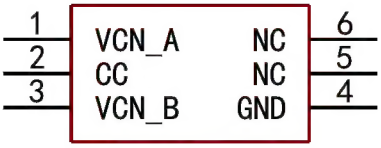

CH252A(DFN6-2*2)

4.2 Pin Description

Pin No.	Pin name	Type	Pin description
0,4	GND	Power	Common ground
1	VCN_A	Power	Input pin A of VCONN power supply
2	CC	Bidirectional	Type-C PD communication
3	VCN_B	Power	Input pin B of VCONN power supply
5,6	NC	-	Reserved pin, optional ground

5. Typical Applications

5.1 Passive Cable, Single-ended eMarker

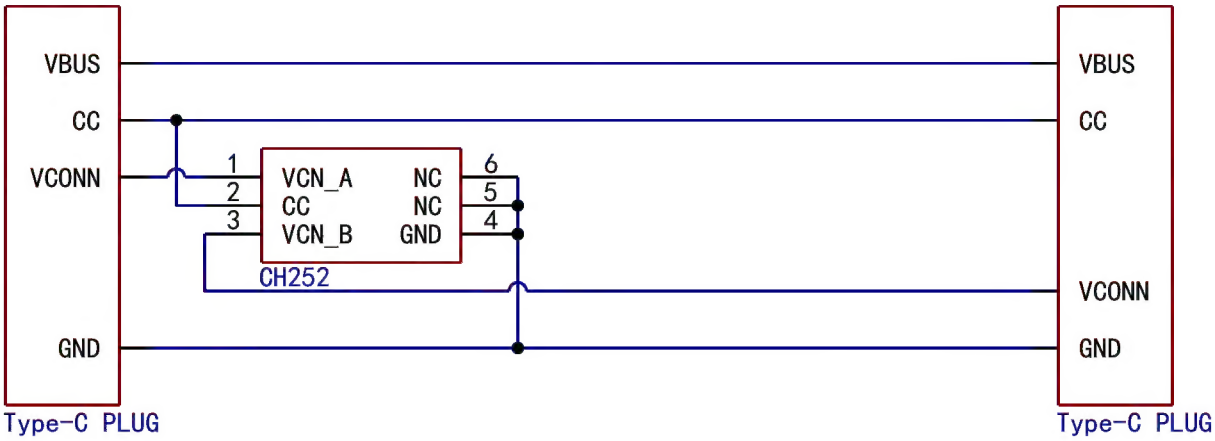

5.2 Passive Cable, Dual-ended eMarker

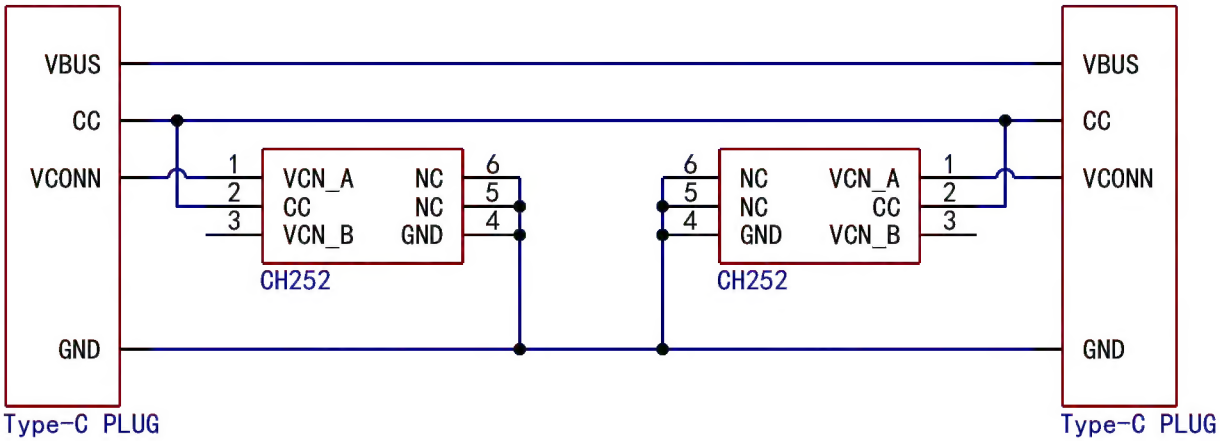

6. Function Description

6.1 Overview

CH252 is a USB Type-C cable eMarker chip that supports USB Type-C 2.1 standard and USB PD 3.1 standard, and can be used for various Type-C cable related applications. After the device supplies power to CH252 via the VCONN line in the Type-C interface, it communicates with CH252 via the CC pin to achieve eMarker related functions.

6.2 SOP' Communication

SOP' is the protocol used in the USB PD protocol for communication between the device and the cable interface powered by the VCONN. After detecting the presence of Ra on the interface, the device supplies power to the cable interface via VCONN and uses SOP' messages to communicate with the eMarker chip inside the cable interface.

6.3 Supported Message

CH252 supports the following three message types: Hard Reset, Cable Reset and SOP' messages. Other types of messages will be ignored and no GoodCRC will be replied.

When a Hard Reset and Cable Reset message is received, the CH252 chip will perform a reset operation and all operating states will be reset.

When a SOP' message is received, CH252 will reply with a GoodCRC message. Only the messages listed in the table below will be further processed and responded to, messages not listed will be ignored after the GoodCRC message is replied to.

When a USB PD 2.0 specification version message is received, CH252 will automatically adapt to the protocol version.

Message Attributes	Message Type	Description
Control Message	Soft_Reset	Software reset messages, resetting the Message IDs received and transmitted.
Data Message	BIST	Built-in messages for testing.
	Discover Identity	Cable characteristic identification command. See 6.3.1 for details.
	Discover SVIDs	Cable standard ID or vendor ID identification command. See 6.3.2 for details.
	Discover Modes	Cable mode identification command. See 6.3.3 for details.
	Enter Mode	Cable mode entry command. See 6.3.3 for details.
	Exit Mode	Cable mode exit command. See 6.3.3 for details.
Extended Message	Get_Status	Get cable interface temperature information.
	Get_Manufacturer_Info	Get manufacturer information. See 6.3.4 for details.

6.3.1 Discover Identity

The Discover Identity message is used by the device to obtain cable characteristics from the eMarker, including cable brand, length, voltage and current carrying capacity, maximum communication rate, etc. When CH252 receives a Discover Identity REQ, it replies with a Discover Identity ACK message. According to the USB PD 3.1 protocol, the Discover Identity ACK message consists of five VDO's in the following format, with the default configuration marked in the table.

ID Header VDO:

Bit(s)	Description
31	USB Communications Capable as USB Host 0b - Not capable ***[Default]*** 1b - Capable
30	USB Communications Capable as a USB Device 0b - Not capable ***[Default]*** 1b - Capable
29~27	SOP' Product Type (Cable Plug/VPD) 011b - Passive Cable ***[Default]*** 100b - Active Cable
26	Modal Operation Supported (Alternate Modes) 0b - Not capable ***[Default]*** 1b - Capable
25~23	Reserved. Shall be set to zero.
22~21	Connector Type 00b - Reserved, for compatibility with legacy systems. 10b - USB Type-C® Receptacle 11b - USB Type-C® Plug ***[Default]***
20~16	Reserved. Shall be set to zero.
15~0	USB Vendor ID. 0x1A86 ***[Default]***

Cert Stat VDO:

Bit(s)	Description
31~0	32-bit unsigned integer, XID 0x000036E5 ***[Default]***

Product VDO:

Bit(s)	Description
31~16	16-bit unsigned integer. USB Product ID 0x8252 ***[Default]***
15~0	16-bit unsigned integer. bcdDevice 0x0000 ***[Default]***

Passive Cable VDO:

Bit(s)	Description
31~28	HW Version 0x0 ***[Default]***
27~24	Firmware Version 0x0 ***[Default]***

23~21	VDO Version 000b - Version 1.0 ***[Default]***
20	Reserved. Shall be set to zero.
19~18	USB Type-C® plug to USB Type-C®/Captive 10b - USB Type-C® ***[Default]*** 11b - Captive
17	EPR Mode Capable 0b - Cable is not EPR Mode Capable 1b - Cable is EPR Mode Capable ***[Default]***
16~13	Cable Latency 0001b - <10ns (~1m) ***[Default]*** 0010b - 10ns to 20ns (~2m) 0011b - 20ns to 30ns (~3m) 0100b - 30ns to 40ns (~4m) 0101b - 40ns to 50ns (~5m) 0110b - 50ns to 60ns (~6m) 0111b - 60ns to 70ns (~7m) 1000b - > 70ns (>~7m)
12~11	Cable Termination Type 00b - VCONN not required ***[Default]*** 01b - VCONN required
10~9	Maximum VBUS Voltage 00b - 20V 11b - 50V ***[Default]***
8~7	Reserved. Shall be set to zero.
6~5	VBUS Current Handling Capability 01b - 3A 10b - 5A ***[Default]***
4~3	Reserved. Shall be set to zero.
2~0	USB Highest Speed 000b - [USB 2.0] 001b - [USB 3.2] Gen1 010b - [USB 3.2]/[USB4] Gen2 011b - [USB4] Gen3 ***[Default]*** 100b - [USB4] Gen4

6.3.2 Discover SVIDs

The Discover SVIDs message is used by the device to obtain the standard ID or vendor ID of the cable from the eMarker. when the CH252 receives the Discover SVIDs REQ, it replies with a Discover SVIDs ACK or NAK message as configured by the protocol.

6.3.3 Discover Modes, Enter Mode and Exit Mode

The Discover Modes message is used by the device to obtain the mode under a specific SVID for the cable from

the eMarker; the Enter Mode and Exit Mode messages are used to enter and exit the mode under a specific SVID. The CH252's response to these three messages is determined by the "Modal Operation Supported" configuration in the Discover Identity message. If the chip is configured to support Modal Operation, the CH252 will respond to the Discover Modes ACK as configured; otherwise, the message will be discarded after the GoodCRC response.

6.3.4 Manufacturer_Info

When CH252 receives Get_Manufacturer_Info, it replies with Manufacturer_Info, which contains the Vendor ID (VID) and Product ID (PID), and can also contain a custom ASCII string of up to 22 bytes, the content of which the content of the string can be customized.
According to the USB PD 3.1 protocol, the Manufacturer_Info message is formatted as follows and is marked with the factory default configuration values.

Byte Offset	Description	Default Value
0	VID	0x1A86
2	PID	0x8252
4	Manufacturer String	"Nanjing Qinheng Micro."

6.4 Factory Default Configuration

CH252 is shipped with a factory default configuration of 240W 1M USB4 Gen3 parameters programmed in. Other non-main parameters in the configuration are listed in section 6.3.1 Discover Identity. Please contact our technical support for additional factory programmed configurations.

6.5 Updating the Configuration

The CH252 uses a multiple programmable MTP ROM for storing configuration parameters. Specifically, the parameters of Discover Identity, Discover SVIDs, Discover Modes, and Manufacturer_Info messages can be configured as desired. The CH252 supports 5 updates of configuration parameters and has a locking function. After locking, you cannot program parameters again.
The VCN_A, VCN_B and CC pins are used for programming. Programming needs to use a special programmer and software, if necessary, please contact our technical support.

7. Parameters

7.1 Absolute Maximum Ratings

(Critical or exceeding the absolute maximum value will probably cause the chip to work improperly or even be damaged.)

Name	Parameter Description	Min.	Max.	Unit
TA	Operating temperature range	-40	110	℃
TS	Storage temperature range	-55	125	℃
VCN	VCN_A/VCN_B voltage on pins	-0.5	25	V
VIOCC	CC voltage on pins	-0.5	28	V
PD	Maximum power consumption of the entire chip		300	mW

7.2 Electrical Characteristics

(Test conditions: TA=25℃)

Name	Parameter description	Min.	Typ.	Max.	Unit
VCN	Auxiliary power supply input VCN_A/VCN_B voltage	2.7	5.0	22	V
ICC	Supply current during operation		1.8	8	mA
RRA	Pull-down resistor Ra for VCN_A/VCN_B pins	800	1000	1200	Ω
VR	Voltage threshold for power-on reset	2.3	2.5	2.7	V
ESDVCN	ESD HBM for VCN_A/VCN_B pins		4		kV
ESDCC	ESD HBM for CC pins		7		kV

8. Package Information

Package Form	Shaping Width	Pin Spacing		Package Description	Order Model
DFN6	2*2mm	0.65mm	25.6mil	Dual Flat No-Lead Package	CH252L
DFN6	2*2mm	0.65mm	25.6mil	Dual Flat No-Lead Package	CH252A

Note: The unit of dimensioning is mm (millimeter).

The first line of the silkscreen 252L and 252A correspond to chips CH252L and CH252A respectively, the second line of the silkscreen represents the chip lot number information.

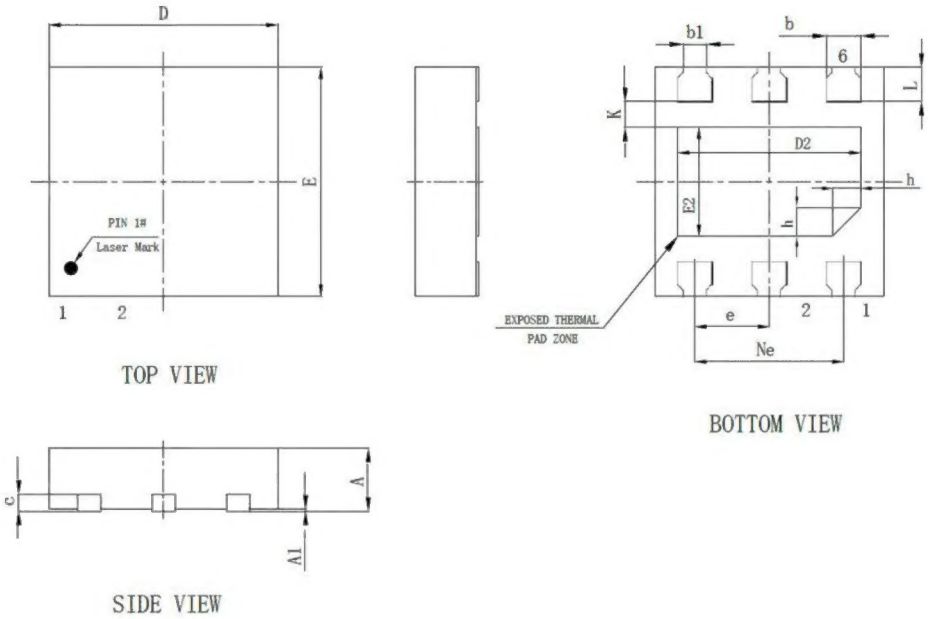

SYMBOL	MILLIMETER		
	MIN	NOM	MAX
A	0.50	0.55	0.60
A1	0	0.02	0.05
b	0.25	0.30	0.35
b1	0.15	0.20	0.25
c	0.10	0.15	0.20
D	1.90	2.00	2.10
D2	1.50	1.60	1.70
e	0.65BSC		
Ne	1.30BSC		
E	1.90	2.00	2.10
E2	0.85	0.95	1.05
L	0.25	0.30	0.35
h	0.20	0.25	0.30
K	0.20	0.225	0.28